Work Order ID 66363

Friday, February 11, 2011 1:17:27 PM

Item ID: D3282-041 **Accept** **Setup Start**

Revision ID: **Stop**

Item Name: Float Web (206L/407)

Start Date: 2/14/2011 **Start Qty:** 8.00 **Cust Item ID:**

Required Date: 2/28/2011 **Req'd Qty:** 8.00 **Customer:**

Reference:

Approvals: **Process Plan:** MF **Date:** 11-02-11 **Tooling:** **Date:** **Run Start**

QC: **Date:** **SPC (Y/N):** **Date:** **Stop**

Sequence ID/ Work Center ID	Operation Description	Set Up/ Run Hours	Tool ID	Tool #	Plan Code	Accept Qty	Reject Qty	Reject Number	Insp. Stamp
Draw Nbr / **Revision Nbr**									
D3282 / Rev C									
100	Skidtubes	0.00							
Skidtubes									
Skidtubes	**Memo** 1-Cut to length as per Dwg D3282. 2- inspect for surface damage as per QSI0018 3- Deburr	0.00							
110	HAAS CNC VERTICAL MACHINING #1	0.00							
HAAS 1									
HAAS CNC vertical machine #1	**Memo** 1-Machine as per Folio FA579 & Dwg D3282 2-Deburr	0.00							
120	QC2- Inspect parts off machine FAI/FAIB	0.00							
QC									
Quality Control	**Memo**	0.00							

11-2-14 8

7 1 RTO

7

Dart Aerospace Ltd

W/O:		WORK ORDER CHANGES					
DATE	STEP	PROCEDURE CHANGE	By	Date	Qty	Approval Chief Eng / Prod Mgr	Approval QC Inspector

Part No: D3282-041 PAR #: _____ Fault Category: Machining NCR: (Yes) No DQA: _____ Date: 11-03-22

Resolution: Scrap Disposition: Scrap QA: N/C Closed: _____ Date: 11/4/06

NCR:		WORK ORDER NON-CONFORMANCE (NCR)						
DATE	STEP	Description of NC Section A	Corrective Action Section B: Initial Chief Eng	Action Description Chief Eng	Sign & Date	Verification Section C	Approval Chief Eng	Approval QC Inspector
11/03/17	110	1 part scrap the .050" dim are too small at the end of part. R.C. the part move up, ~~due~~ Pulled up in the vise. Not tight enough.	DSCRAP	scrap destroy no replace	11/03/17	B.A 11/03/22	DSCRAP	11-03-22
			DSCRAP					

NOTE: Date & initial all entries

H:\fFORMS\Quality Assurance\approved QA\NCRWO RevE

Work Order ID 66363

Friday, February 11, 2011 1:17:27 PM

Item ID: D3282-041 **Accept** **Setup Start**

Revision ID:

Item Name: Float Web (206L/407) **Stop**

Start Date: 2/14/2011 **Start Qty:** 8.00 **Cust Item ID:**

Required Date: 2/28/2011 **Req'd Qty:** 8.00 **Customer:**

Reference:

Approvals: **Process Plan:** _____ **Date:** _____ **Tooling:** _____ **Date:** _____ **Run Start**

QC: _____ **Date:** _____ **SPC (Y/N):** _____ **Date:** _____ **Stop**

Sequence ID/ Work Center ID	Operation Description	Set Up/ Run Hours	Tool ID	Tool #	Plan Code	Accept Qty	Reject Qty	Reject Number	Insp. Stamp
130	QC8- Inspect parts - second check	0.00							
QC			B.A 11/03/22			7	ϕ		
Quality Control	Memo	0.00							
140	Chemical Conversion Coat per QSI005 4.1	0.00							
HandFinish			7m.l 11/03/29			7X			
Hand Finishing	Memo	0.00							
150	QC3- Inspect Part Finish	0.00							
QC						7	ϕ	11/03/29	
Quality Control	Memo	0.00							

Dart Aerospace Ltd

W/O:		WORK ORDER CHANGES					
DATE	STEP	PROCEDURE CHANGE	By	Date	Qty	Approval Chief Eng / Prod Mgr	Approval QC Inspector

Part No: _____ **PAR #:** _____ **Fault Category:** _____ **NCR:** Yes No **DQA:** _____ **Date:** _____

Resolution: _____ **Disposition:** _____ **QA: N/C Closed:** _____ **Date:** _____

NCR:		WORK ORDER NON-CONFORMANCE (NCR)						
DATE	STEP	Description of NC Section A	Corrective Action Section B			Verification Section C	Approval Chief Eng	Approval QC Inspector
			Initial Chief Eng	Action Description Chief Eng	Sign & Date			

NOTE: Date & initial all entries

H:\fFORMS\Quality Assurance\approved QA\NCRWO RevE

Work Order ID 66363

Friday, February 11, 2011 1:17:27 PM

Item ID: D3282-041 **Accept** **Setup Start**

Revision ID:

Item Name: Float Web (206L/407) **Stop**

Start Date: 2/14/2011 **Start Qty:** 8.00 **Cust Item ID:**

Required Date: 2/28/2011 **Req'd Qty:** 8.00 **Customer:**

Reference:

Approvals: **Process Plan:** _____ **Date:** _____ **Tooling:** _____ **Date:** _____ **Run Start**

QC: _____ **Date:** _____ **SPC (Y/N):** _____ **Date:** _____ **Stop**

Sequence ID/ Work Center ID	Operation Description	Set Up/ Run Hours	Tool ID	Tool #	Plan Code	Accept Qty	Reject Qty	Reject Number	Insp. Stamp
160	Skidtubes	0.00				7			
Skidtubes	**Memo**	0.00							
Skidtubes	1-Install doublers as per Dwg D3282. Apply LPS-3 between doublers and web A/RN/ALPS-3 MW6551								
		SAD 11-04-01							
170	QC5- Inspect part completeness to step on W/O	0.00				7			
QC	**Memo**	0.00							
Quality Control		S w/o 4/04							
180	Identify as per dwg & Stock Location: 46	0.00							
Packaging	**Memo**	0.00							
Packaging		DP 11-4-6				7			

Dart Aerospace Ltd

W/O:		WORK ORDER CHANGES						
DATE	STEP	PROCEDURE CHANGE	By	Date	Qty	Approval Chief Eng / Prod Mgr	Approval QC Inspector

Part No: _____ **PAR #:** _____ **Fault Category:** _____ **NCR:** Yes No **DQA:** _____ **Date:** _____

Resolution: _____ **Disposition:** _____ **QA: N/C Closed:** _____ **Date:** _____

NCR:		WORK ORDER NON-CONFORMANCE (NCR)						
DATE	STEP	Description of NC Section A	Corrective Action Section B			Verification Section C	Approval Chief Eng	Approval QC Inspector
			Initial Chief Eng	Action Description Chief Eng	Sign & Date			

NOTE: Date & initial all entries

H:\fFORMS\Quality Assurance\approved QA\NCRWO RevE

Work Order ID 66363

Friday, February 11, 2011 1:17:27 PM

Item ID: D3282-041 **Accept** **Setup Start**

Revision ID:

Item Name: Float Web (206L/407) **Stop**

Start Date: 2/14/2011 **Start Qty:** 8.00 **Cust Item ID:**

Required Date: 2/28/2011 **Req'd Qty:** 8.00 **Customer:**

Reference:

Approvals: **Process Plan:** _____ **Date:** _____ **Tooling:** _____ **Date:** _____ **Run Start**

QC: _____ **Date:** _____ **SPC (Y/N):** _____ **Date:** _____ **Stop**

Sequence ID/ Work Center ID	Operation Description	Set Up/ Run Hours	Tool ID	Tool #	Plan Code	Accept Qty	Reject Qty	Reject Number	Insp. Stamp
190	QC21- Final Inspection - Work Order Release	0.00						11/4/6	
QC	Memo	0.00							
Quality Control									

MF
11-04-06

Dart Aerospace Ltd

W/O:		WORK ORDER CHANGES					
DATE	STEP	PROCEDURE CHANGE	By	Date	Qty	Approval Chief Eng / Prod Mgr	Approval QC Inspector

Part No: _____ **PAR #:** _____ **Fault Category:** _____ **NCR:** Yes No **DQA:** _____ **Date:** _____

Resolution: _____ **Disposition:** _____ **QA: N/C Closed:** _____ **Date:** _____

NCR:		WORK ORDER NON-CONFORMANCE (NCR)						
DATE	STEP	Description of NC Section A	Corrective Action Section B			Verification Section C	Approval Chief Eng	Approval QC Inspector
			Initial Chief Eng	Action Description Chief Eng	Sign & Date			

NOTE: Date & initial all entries

H:\fFORMS\Quality Assurance\approved QA\NCRWO RevE

Picklist Print

Friday, February 11, 2011 1:17:21 PM

Work Order ID: 66363

Parent Item: D3282-041

Parent Item Name: Float Web (206L/407)

Start Date: 2/14/2011 **Required Date:** 2/28/2011

Start Qty: 8.00 **Required Qty:** 8.00

Comments: IPP Rev:B□05.09.23□Procedure change□KJ/JLM□

Component Item ID/ Item Name	Replacement Item ID	Mfg/ Purch	Bin Item	Primary Location	Last Location	Route Seq ID	Unit of Measure	Qty on Hand	Qty per Kit	Total Qty	Qty Issued	Date Issued	Status
D2792-130		Manufactured	No			160	Each	38.0000	1	8			
EXTRUSION													
				Location		**Loc Qty**		**Loc Code**					
				MAT06		38							
					61630	38							
D3283-1		Manufactured	No			160	Each	13.0000	2	16			
Doubler													
				Location		**Loc Qty**		**Loc Code**					
				ST046		11							
					63572	11							
				ST048		2							
					57725	2							
MS20470AD4-7		Purchased	No			100	Each	1,547.000	57	456			
Rivet, Universal Head													
				Location		**Loc Qty**		**Loc Code**					
				ST320		1547							
					115996	361							
					116081	1186							

8 DP 11-2-14

SAD 11-09-01

B66553

11

3

SAD 11-09-01

~~456~~ 399

Dart Aerospace Ltd

W/O:		WORK ORDER CHANGES						
DATE	STEP	PROCEDURE CHANGE	By	Date	Qty	Approval Chief Eng / Prod Mgr	Approval QC Inspector

Part No: _____ **PAR #:** _____ **Fault Category:** _____ **NCR:** Yes No **DQA:** _____ **Date:** _____

Resolution: _____ **Disposition:** _____ **QA: N/C Closed:** _____ **Date:** _____

NCR:		WORK ORDER NON-CONFORMANCE (NCR)						
DATE	STEP	Description of NC Section A	Corrective Action Section B			Verification Section C	Approval Chief Eng	Approval QC Inspector
			Initial Chief Eng	Action Description Chief Eng	Sign & Date			

NOTE: Date & initial all entries

H:\fFORMS\Quality Assurance\approved QA\NCRWO RevE

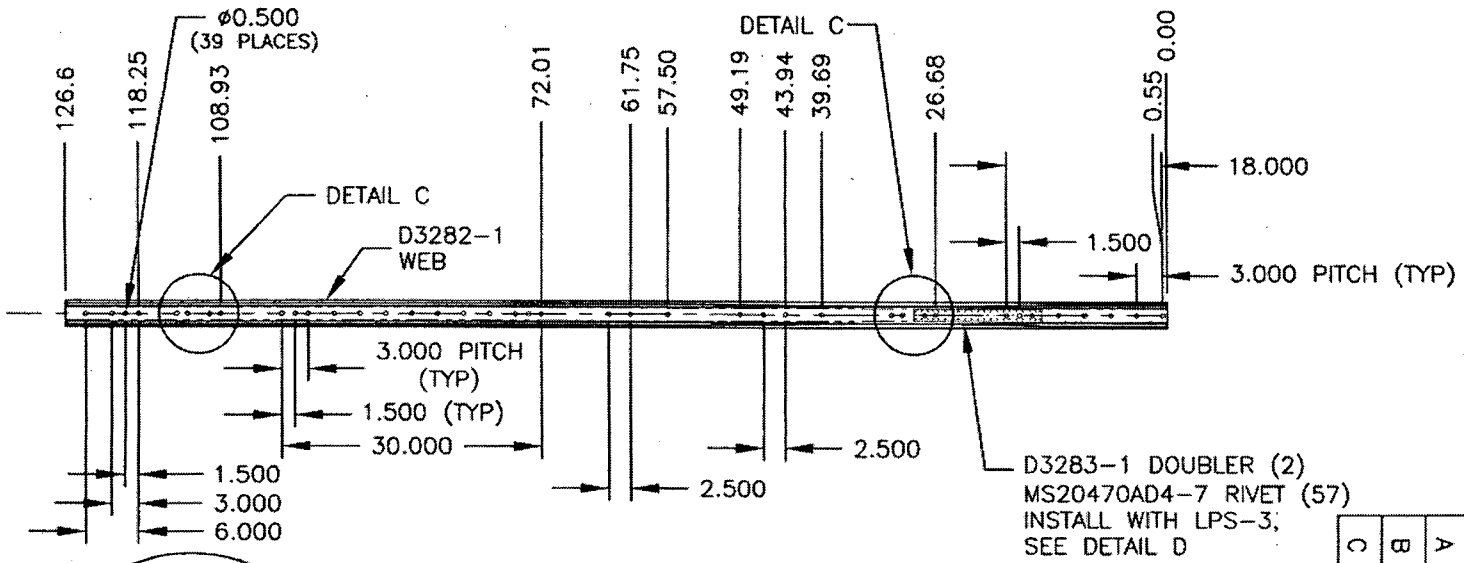

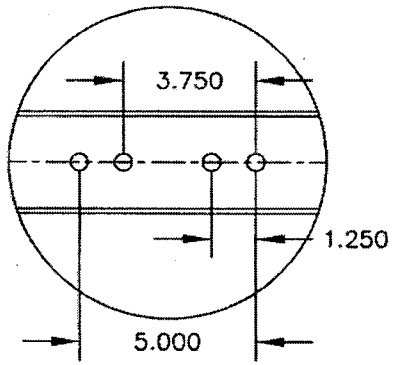

DETAIL C
SCALE 1:5
RIVET HOLES NOT SHOWN
FOR CLARITY

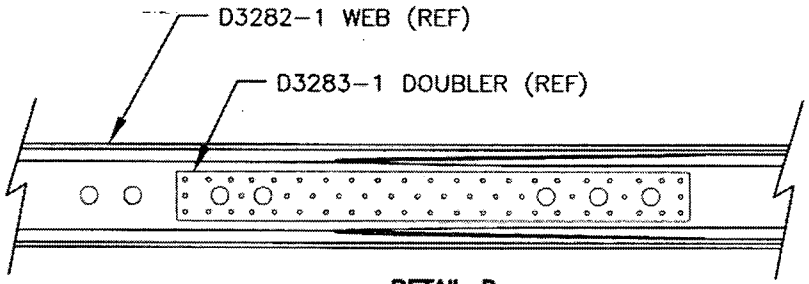

DETAIL D
SCALE 1:5

66363

RELEASED
05.09.12

D3282-041 FLOAT WEB

1) MAKE FROM D2792-130 EXTRUSION
2) FINISH: CHEMICAL CONVERSION COAT PER DART QSI 005 4.1
3) TOLERANCES ARE PER DART QSI 018 UNLESS OTHERWISE NOTED
4) BREAK ALL SHARP EDGES 0.010 TO 0.020
5) APPLY A LAYER OF LPS LABORATORIES' LPS-3 BETWEEN D3283-1 DOUBLERS AND D3282-1 WEB. INSTALL RIVETS COATED WITH LPS-3
6) SEE PAGE 2 FOR MACHINING DETAILS

A	04.05.05	NEW ISSUE
B	05.03.16	MOVE HOLES, ADD D3390-1 DOUBLERS
C	05.08.09	REMOVE D3390-1, NOW MACHINED

DART

DESIGN CP | DRAWN BY CP | CHECKED | APPROVED | DATE 05.08.09

DART AEROSPACE USA, INC.
PORT HADLOCK, WA

DRAWING NO. D3282 | REV. C
TITLE FLOAT WEB, 206L/407
SHEET 1 OF 2 | SCALE 1:20

Dart Aerospace Ltd

W/O:		WORK ORDER CHANGES					
DATE	STEP	PROCEDURE CHANGE	By	Date	Qty	Approval Chief Eng / Prod Mgr	Approval QC Inspector

Part No: _____ **PAR #:** _____ **Fault Category:** _____ **NCR:** Yes No **DQA:** _____ **Date:** _____

Resolution: _____ **Disposition:** _____ **QA: N/C Closed:** _____ **Date:** _____

NCR:		WORK ORDER NON-CONFORMANCE (NCR)						
DATE	STEP	Description of NC Section A	Corrective Action Section B			Verification Section C	Approval Chief Eng	Approval QC Inspector
			Initial Chief Eng	Action Description Chief Eng	Sign & Date			

NOTE: Date & initial all entries

H:\fFORMS\Quality Assurance\approved QA\NCRWO RevE

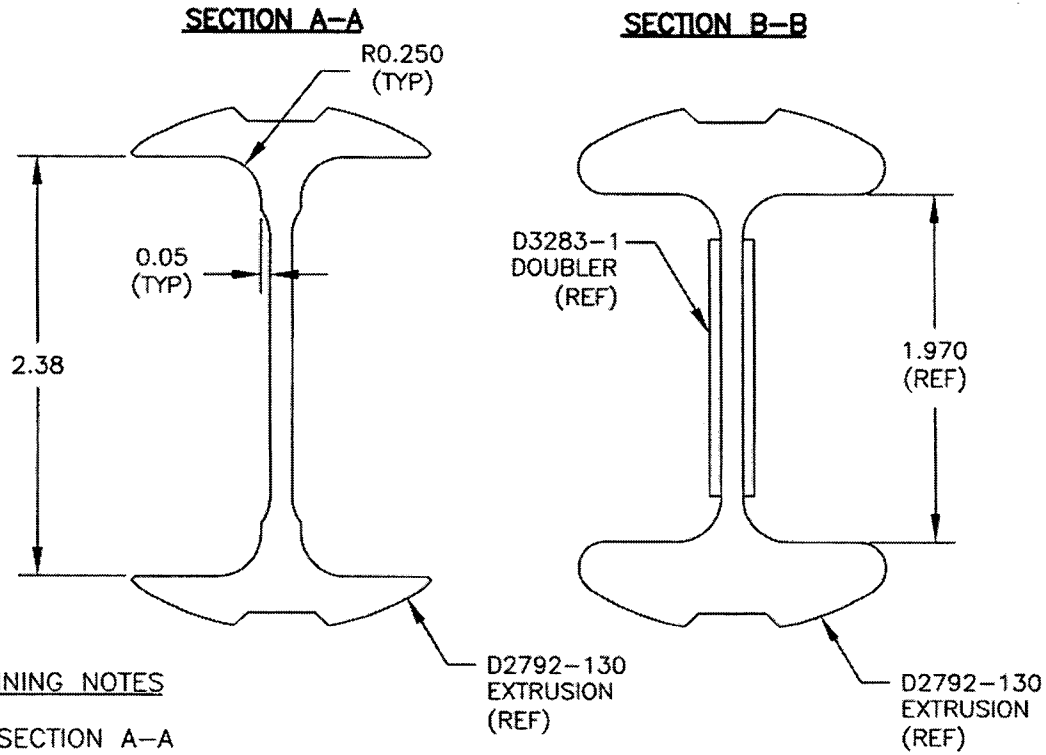

D3282–1 MACHINING NOTES

1. UNIFORM SECTION A–A
2. UNIFORM TAPER FROM SECTION A–A TO SECTION B–B
3. UNIFORM SECTION B–B
4. UNIFORM TAPER FROM SECTION B–B TO SECTION A–A
   DRILL #30 (ø0.128 REF) HOLES (57 PLACES) TO LINE UP WITH D3283–1, SEE DETAIL D FOR REFERENCE
5. UNIFORM SECTION A–A

6 R1.00 BETWEEN SECTIONS

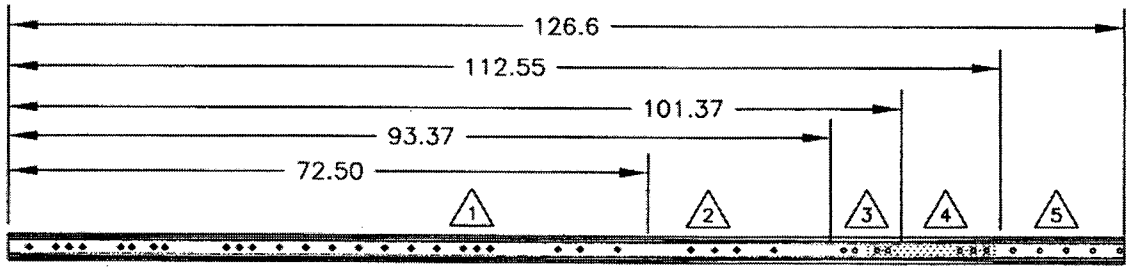

#66363

RELEASED
05.04.12

DESIGN CP	DRAWN BY CP	DART AEROSPACE USA, INC. PORT HADLOCK, WA	
CHECKED	APPROVED	DRAWING NO. D3282	REV. C
DATE 05.08.09		TITLE FLOAT WEB, 206L/407	SHEET 2 OF 2
			SCALE 1:20

Dart Aerospace Ltd

W/O:		WORK ORDER CHANGES						
DATE	STEP	PROCEDURE CHANGE		By	Date	Qty	Approval Chief Eng / Prod Mgr	Approval QC Inspector

Part No: _____ **PAR #:** _____ **Fault Category:** _____ **NCR:** Yes No **DQA:** _____ **Date:** _____

Resolution: _____ **Disposition:** _____ **QA: N/C Closed:** _____ **Date:** _____

NCR:		WORK ORDER NON-CONFORMANCE (NCR)						
DATE	STEP	Description of NC Section A	Corrective Action Section B			Verification Section C	Approval Chief Eng	Approval QC Inspector
			Initial Chief Eng	Action Description Chief Eng	Sign & Date			

NOTE: Date & initial all entries

H:\fFORMS\Quality Assurance\approved QA\NCRWO RevE

DART AEROSPACE LTD	Work Order:	66363
Description: Float Web	Part Number:	D3282-041
Inspection Dwg: D3282 Rev: C		Page 1 of 1

FIRST ARTICLE INSPECTION CHECKLIST

[X] First Article [ ] Prototype

Drawing Dimension	Tolerance	Actual Dimension	Accept	Reject	Method of Inspection	Comments
126.6	+/-0.100	126.2	✓		M-tape ML-2	
1.500	+/-0.010	1.500	✓		Vern ML-7	
3.000	+/-0.010	3.000	✓		"	
6.000	+/-0.010	6.000	✓		"	
1.250	+/-0.010	1.250	✓		"	
30.000	+/-0.010	30.000	✓		M-tape ML-2	
1.500	+/-0.010	1.500	✓		Vern ML-2	
72.01	+/-0.030	72.010	✓		M-tape ML-2	
61.75	+/-0.030	61.750	✓		"	
57.50	+/-0.030	57.500	✓		"	
49.19	+/-0.030	49.190	✓		"	
43.94	+/-0.030	43.940	✓		"	
39.69	+/-0.030	39.690	✓		"	
26.68	+/-0.030	26.680	✓		"	
0.55	+/-0.030	.550	✓		Vern ML 7	
1.970	+/-0.010	1.970	✓		"	
2.38	+/-0.030	2.375	✓		"	
0.05	+/-0.030	.050	✓		"	

Measured by:	[signature]	Audited by:	H.A	Prototype Approval:	N/A
Date:	11/03/17	Date:	11/03/22	Date:	N/A

Rev	Date	Change	Revised by	Approved
A	07.04.02	New Issue	KJ/JLM [signature]	[signature]